TOWN OF AMHERST
APPLICATION FOR PERMIT TO DISPLAY A BANNER

FEE: $80.00. *Return application and fee to the Department of Public Works*
Cancellation Policy: *60 day notice required for a refund.*
Tentative reservations held for three weeks only.

Name of Sponsoring Organization : _____

Address of Sponsoring Organization: _____

_____

Contact: _____ Daytime Telephone Number: _____

Email: _____

Dates Requested to Display Banner (no more than 30 days before event): _____

Proposed Wording on Banner (Must contain the name of the sponsoring organization & the date of the event.): _____

_____

_____

_____

TO BE COMPLETED BY THE DEPARTMENT OF PUBLIC WORKS:

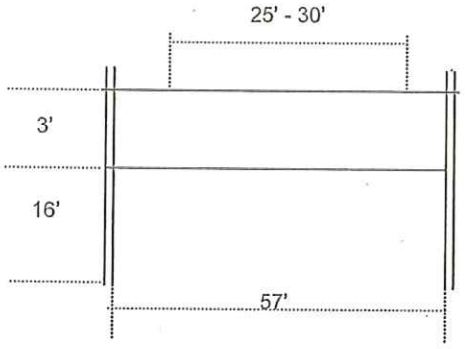

Recommended dimensions above. Banner must clear road by 16'

This permit is issued to you to display an over-the-street banner for the following time period:

_____ to _____

_____
Superintendent of Public Works

Date Received: _____ Permit #: _____

Time Received: _____ Date Issued: _____

cc: Select Board Office (Date)_____

RULES AND ORDERS REGULATING THE ISSUANCE OF OVER-THE-STREET BANNER PERMITS

In accordance with the provisions of Article III (Regulations of Signs) of the Town Bylaws, the Select Board of the Town of Amherst hereby adopts the following rules and orders regulating the issuance of over-the-street banner permits.

Section 1 General Information

Banners may be displayed in Amherst only by permit from the Select Board or their designee. Permitted banners shall be displayed between the poles located on South Pleasant Street north of the Sellen Street intersection. Banners shall be erected by the Department of Public Works.

Section 2 Content

a. Allowed: Permits will be granted only for banners which announce an upcoming event sponsored by a non-profit or not-for-profit organization, which event shall commence no later than 30 days after the hanging of the banner. Permits granted prior to the effective date of amended rules and orders shall not be grandfathered. The Town may require an organization to present a copy of their non-profit status as approved by the Federal government or the Commonwealth.

b. Sponsors and Dates: Banners must contain the date of the event and the name of the sponsoring non-profit organization. Banners may contain acknowledgment of commercial sponsors on not more than 10% of the banner.

Section 3 Applications

Applications for banner permits are to be filed with the Department of Public Works. Permits are limited to seven (7) calendar days beginning and ending on Monday of any given week. For a week in which a holiday falls on Monday, the permit will begin on Tuesday. Banners must be delivered to the Department of Public Works by 3:30 p.m. on the Friday preceding its reserved seven-day time slot. Banners are erected on Monday mornings. Old banners may be retrieved from the Department of Public Works on Monday after 12:00 p.m. Banners that have not been picked up after 30 days shall be disposed of at the cost of the permitee. Permits shall be granted on a first come, first served basis, for two non-consecutive weeks per year for separate, dated events. Applications will be accepted for the current and next calendar years only.

Section 4 Construction of Banner

The permitee is responsible for the construction of the banner which shall be constructed of a canvas fabric equal to a weight of 10.10 ounces per square yard or of a nylon fabric. The banner fabric shall be hemmed on four sides in triple thickness. Five #1 spur grommets shall be installed on the top edge of the banner, equally spaced. Two 3/8" diameter synthetic ropes, each 75 feet in length, shall be sewn into the top and bottom edges of the banner. The suggested banner size is 25'-30' long, 2'-3' wide. Slashes or cuts in the banner will not be permitted. The Department of Public Works has the right to refuse to erect a banner which does not meet these requirements.

Section 5 Fees

Fees for the banner permit shall be set by the Select Board.

Adopted by the Amherst Select Board on June 22, 1992.
Amended February 1, 1995.
Amended December 20, 2004.
Amended February 14, 2005